WIRING DIAGRAM

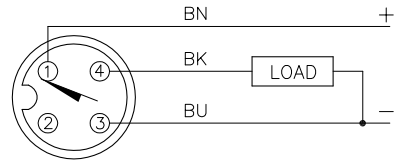

OUTPUT: AP6X

SHORT–CIRCUIT AND OVERLOAD PROTECTED

LOCKNUT LN–SS08

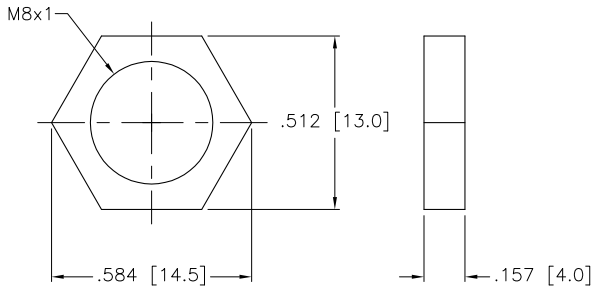

SPECIFICATIONS

OPERATING VOLTAGE	10–30 VDC
RIPPLE	≤10%
DIFFERENTIAL TRAVEL (HYSTERESIS)	1–15% (5% TYPICAL)
VOLTAGE DROP ACROSS CONDUCTING SENSOR	≤1.8 V at 150 mA
OUTPUT FUNCTION	NORMALLY OPEN 3–WIRE DC SELF–CONTAINED
TTL COMPATIBLE	NO
SHORT–CIRCUIT PROTECTED	YES
TRIGGER CURRENT FOR OVERLOAD PROTECTION	≥170 mA
CONTINUOUS LOAD CURRENT	≤150 mA
LEAKAGE (OFF–STATE) CURRENT	<10 μA
NO–LOAD CURRENT	5.5–9.5 mA
TIME DELAY BEFORE AVAILABILITY	≤8 ms
POWER–ON EFFECT PROTECTION	INCORPORATED
REVERSE POLARITY PROTECTION	INCORPORATED
WIRE–BREAK PROTECTION	INCORPORATED
PROTECTION AGAINST TRANSIENTS	1 kV, 0.1 ms, 1kΩ
OPERATING TEMPERATURE	−25°C to +70°C (−13°F to +158°F)
ENCLOSURE	MEETS NEMA 1, 3, 4, 6, 13 AND IEC IP67
SHOCK	30 g, 11 ms
VIBRATION	55 Hz, 1 mm AMPLITUDE (IN ALL 3 PLANES)
LED FUNCTION	YELLOW: OUTPUT ENERGIZED
RATED OPERATING DISTANCE(Sn)	1.5 mm = .059" (NOMINAL)
SWITCHING FREQUENCY	3000 Hz
REPEATABILITY	≤2% OF RATED OPERATING DISTANCE
SHIELDED	YES
MATING PLUGS/CABLES	4–PIN "EUROFAST" CONSTRUCTION

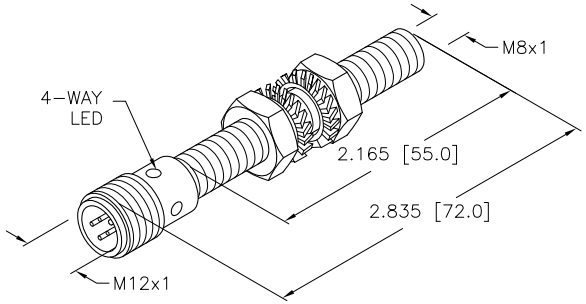

SOURCE DRAWING - FOR REFERENCE ONLY

RELATED DOCUMENTS
1.
2.
3.
4.

3RD ANGLE PROJECTION

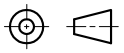

TURCK INC
High Technology Sensors and Automation Controls

3000 CAMPUS DRIVE
MINNEAPOLIS, MN 55441
1–800–544–7769
(763) 553–7300
(763) 553–0708 fax
turck.com

MATERIAL
STAINLESS STEEL BARREL

FINISH
CHROME PLATED BRASS CONNECTOR

ALL DIMENSIONS DISPLAYED ON THIS DRAWING ARE FOR REFERENCE ONLY

CONTACT TURCK FOR MORE INFORMATION

DRFT SWC
DATE 12/12/95
DSGN
SCALE 1=2.0

UNIT OF MEASUREMENT
INCH [MILLIMETER]
DO NOT SCALE THIS DRAWING

DESCRIPTION
Bi 1.5–G08–AP6X–H1341

IDENTIFICATION NO. S4603600
REV A

FILE: S4603600
SHEET 1 OF 1

REV	DESCRIPTION	BY	DATE	ECO NO.
A	UPDATE PART, MATERIAL, NEW FORMAT	IK	08/16/00	T3880